Dimension:
Unit=mm

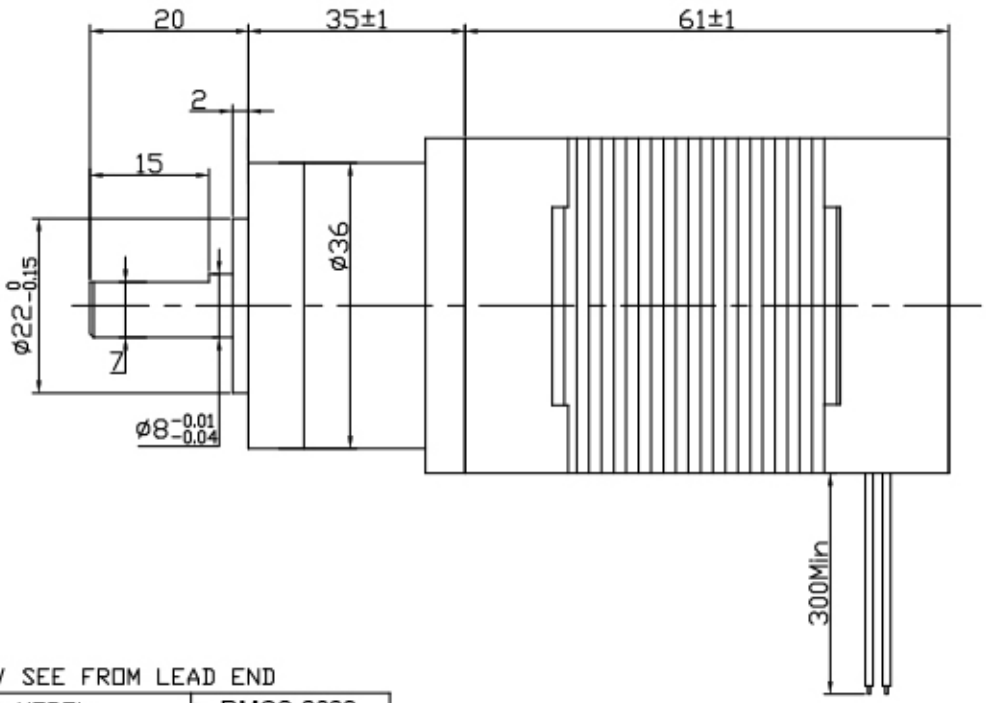

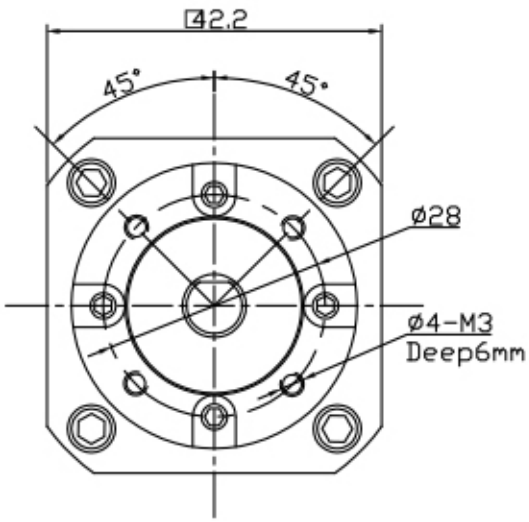

ROTATION: CW SEE FROM LEAD END

MANUFACTUER MODEL	RMCS-2022
NUMBER OF POLES	8
PHASE TO PHASERESISTANCE	0.73 OHMS
NOMINAL VOLTAGE	24 VDC
NO LOAD SPEED	5800±10% RPM
NO LOAD CURRENT	0.45 Amps Max.
RATED TORQUE	0.125 N-m
RATED SPEED	4000±10% RPM
OUTPUT POWER	52.5 W
BACK EMF CONSTANT	4.1 V/kRPM
TORQUE CONSTANT	0.04 N-m/A
INSULATION CLASS	B
MOTOR SPECIFICATIONS WITH PLANETARY GEAR	
RATED TORQUE	1.92 N-M
RATED SPEED	208±10% RPM
RATIO	1:19.2

ELECTRICAL CONNECTION TABLE			
+5V	RED	红	UL1007 26 AWG
HALL U	YEL	黄	
HALL V	GRE	绿	
HALL W	BLU	蓝	
GND	GND	黑	
PHASE U	YEL	黄	UL1007 20 AWG
PHASE V	GRE	绿	
PHASE W	BLU	蓝	

Connection diagram:

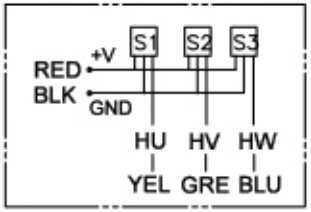

Hall sensor cable
Note: hall sensor power supply voltage +5 to +20VDC

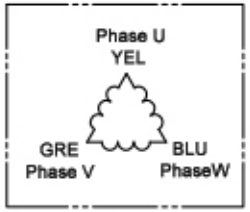

Wiring cable